PYLE®

PyleUSA.com

For user guides in multiple languages,
SCAN THE QR CODE
and enter your model number
User Manuals available in
Italian I German I Polish I Turkish I Dutch

Questions or Comments
We are here to help!
Phone: 1.718.535.1800
PyleUSA.com/ContactUs

Visit Our Website
SCAN ME
PyleUSA.com

PYLE®
PyleUSA.com

ENG

SPECIFICATIONS

PADH121
PADH151
PADH181

PADH879 **PADH1079**
PADH1279 **PADH1579**

PADH124
PADH153
PADH183

PAHT8

PAHT6

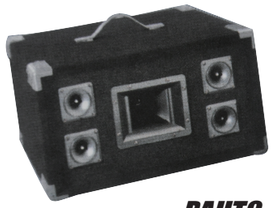

PAHT9

PAHT4

About Pyle PADH/PAHT STAGE Speaker Systems

Congratulations

Your have just purchased one of our high quality Pyle PADH/PAHT speaker,Pyle PADH/PAHT STAGE Speaker System is carefully desi-gned & manufactured for STAGE use.They could deliver consistent and high performance

The General Features of Pyle PADH/PAHT STAGE Speaker Systems

PADH SERIES:

HEAVY DUTY CONSTRUCTION WIREINFORCED CORNERS

BLACK CARPETED FINISH

QUICK CONNECT SPEAKER TERMINALS

DUAL PORTS FOR ADDED BASS RESPONSE

BUILT IN CROSSOVER NETWORK

IMPEDANCE: 8 OHM

PAHT SERIES:

BLACK CARPETED FINISH

IMPEDANCE: 8 OHM

PADH879 PADH1079 PADH1279 PADH1579

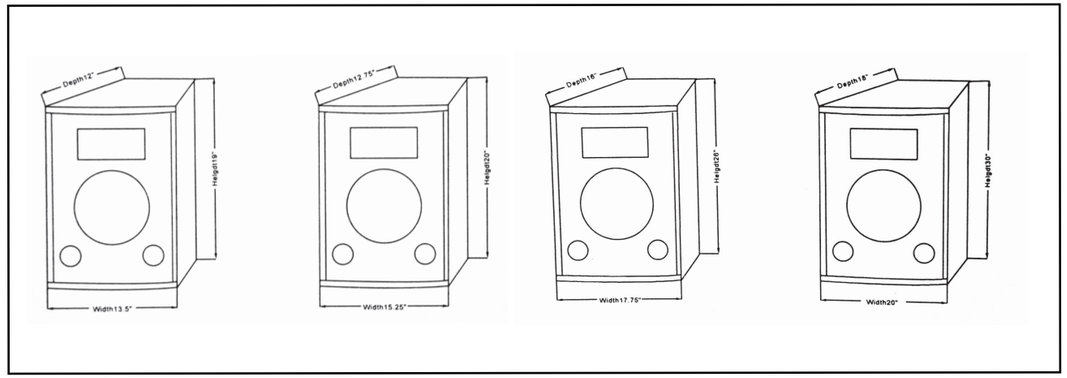

SPECIFICATIONS	PADH879	PADH1079
WOOFER SIZE	WOOFER 1x8”-inch (20.3-cm)	WOOFER 1x10”-inch (25.4-cm)
TWEETER SIZE	DOME HORN 3”x7”-inch (7.6x17.7-cm)	DOME HORN 4”x10”-inch (10.1x25.4-cm)
SENSITIVITY	96DB	98DB
FREQUENCY RESPONSE	50-20KHZ	40-20KHZ
MAX POWER	300 WATTS	500 WATTS
IMPEDANCE	8 OHM	8 OHM
CROSSOVER NETWORK	INCLUDED	INCLUDED
DIMENSIONS	19”Hx13.5”Wx12”D-inch (48.2Hx34.2Wx30.4D-cm)	20”Hx15.25”Wx12.75”D-inch (50.8Hx38.7Wx32.3D-cm)

SPECIFICATIONS	PADH1279	PADH1579
WOOFER SIZE	WOOFER 1x12”-inch (30.4-cm)	WOOFER 1x15”-inch (38.1-cm)
TWEETER SIZE	DOME HORN 4”x12”-inch (10.1x30.8-cm)	DOME HORN 5”x15”-inch (12.7x38.1-cm)
SENSITIVITY	97DB	98DB
FREQUENCY RESPONSE	40-20KHZ	40-20KHZ
MAX POWER	600 WATTS	800 WATTS
IMPEDANCE	8 OHM	8 OHM
CROSSOVER NETWORK	INCLUDED	INCLUDED
DIMENSIONS	26”Hx17.75”Wx16”D-inch (66Hx45Wx40D-cm)	30”Hx20”Wx18”D-inch (76.2Hx50.8Wx45.7D-cm)

PADH121 PADH151 PADH181

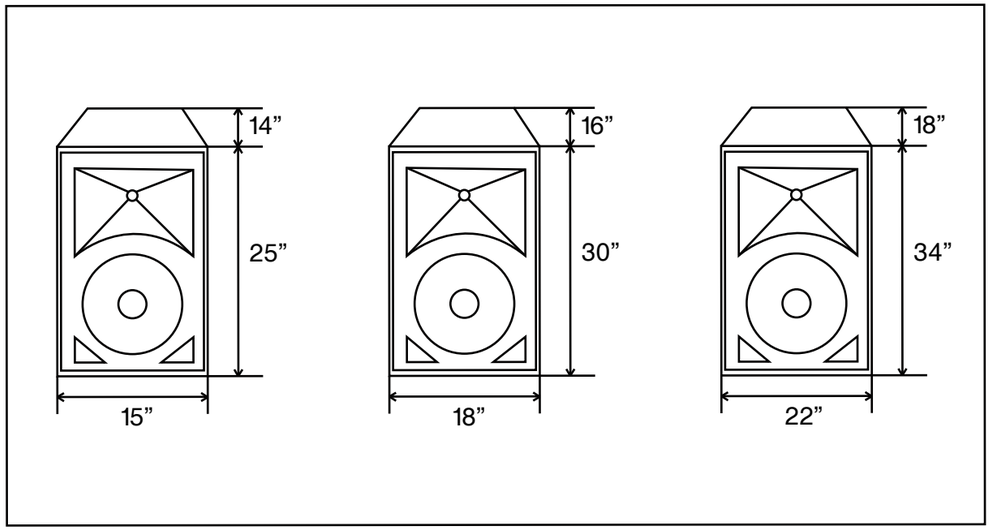

SPECIFICATIONS	PADH121	PADH151	PADH181
ENCLOSURE TYPE	2-WAY BASS REFLEX	2-WAY BASS REFLEX	2-WAY BASS REFLEX
WOOFER SIZE	WOOFER 1x12”-inch (30.4-cm)	WOOFER 1x15”-inch (38.1-cm)	WOOFER 1x18”-inch (45.7-cm)
TWEETER SIZE	DOME 12”x14”-inch (30.4x35.5-cm)	DOME 15”x17”-inch (38.1x43.1-cm)	DOME 16”x20”-inch (40.6x50.8-cm)
SENSITIVITY	97DB	97DB	97DB
FREQUENCY RESPONSE	50-20KHZ	45-20KHZ	40-20KHZ
MAX POWER	600 WATTS	800 WATTS	1000 WATTS
IMPEDANCE	8 OHM	8 OHM	8 OHM
CROSSOVER NETWORK	INCLUDED	INCLUDED	INCLUDED
DIMENSIONS	25”Hx15”Wx14”D-inch (63.5Hx38.1Wx35.5D-cm)	32”Hx18”Wx16”D-inch (81.2Hx45.7Wx40.6D-cm)	34”Hx22”Wx18”D-inch (86.3Hx55.8Wx45.7D-cm)

PADH124 PADH153 PADH183

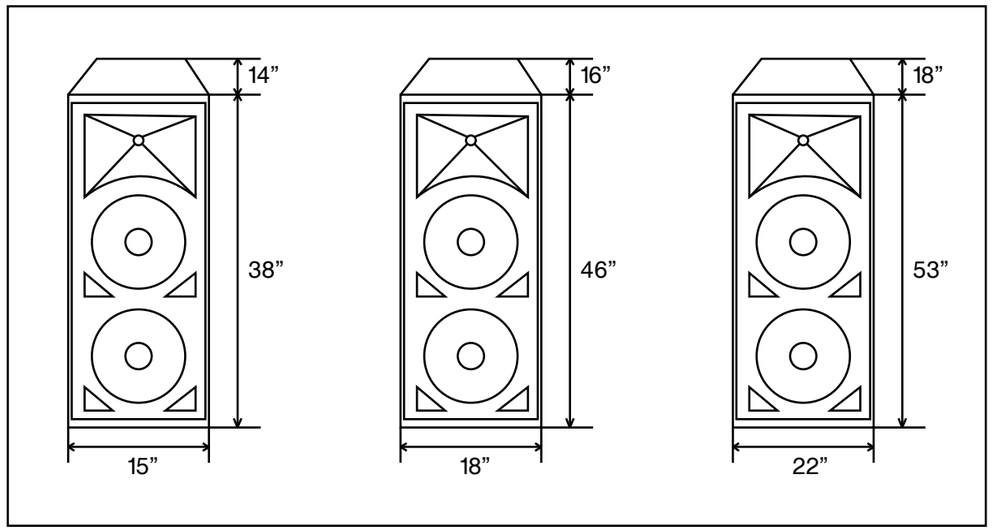

SPECIFICATIONS	PADH124	PADH153	PADH183
WOOFER SIZE	WOOFER 2x12”-inch (30.4-cm)	WOOFER 2x15”-inch (38.1-cm)	WOOFER 2x18”-inch (45.7-cm)
TWEETER SIZE	DOME: 12”x14”-inch (30.4x35.5-cm)	DOME: 15”x17”-inch (38.1x43.1-cm)	DOME: 16”x20”-inch (40.6x50.8-cm)
SENSITIVITY	98DB	98DB	98DB
FREQUENCY RESPONSE	45-20KHZ	40-20KHZ	30-20KHZ
MAX POWER	1200 WATTS	1600 WATTS	2000 WATTS
IMPEDANCE	8 OHM	8 OHM	8 OHM
CROSSOVER NETWORK	INCLUDED	INCLUDED	INCLUDED
DIMENSIONS	38”Hx15”Wx14”D-inch (96.5Hx38.1Wx35.5D-cm)	46”Hx18”Wx16”D-inch (116.8Hx45.7Wx40.6D-cm)	53”Hx22”Wx18”D-inch (134.6Hx55.8Wx45.7D-cm)

PAHT6

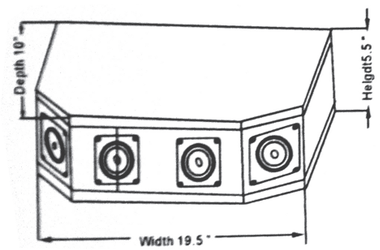

PAHT4

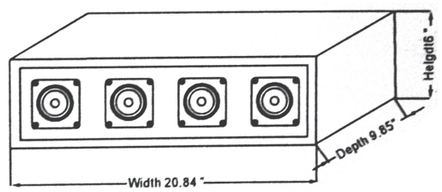

SPECIFICATIONS	PAHT6	PAHT4
TWEETER SIZE	PIEZO 6"x 3.5"-inch (15.2x8.8-cm)	PIEZO 4"x 3"-inch (10.1x7.6-cm)
SENSITIVITY	97DB	97DB
FREQUENCY RESPONSE	4K-27KHZ	4K-27KHZ
MAX POWER	300 WATTS	300 WATTS
IMPEDANCE	8 OHM	8 OHM
DIMENSIONS	5.5"Hx19.5"Wx10"D-inch (13.9Hx49.5Wx25.4D-cm)	6"Hx20.84"Wx9.85"D-inch (15.2Hx53Wx25D-cm)

PAHT8

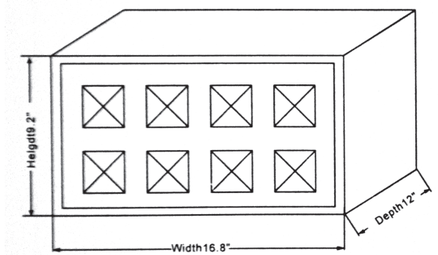

PAHT9

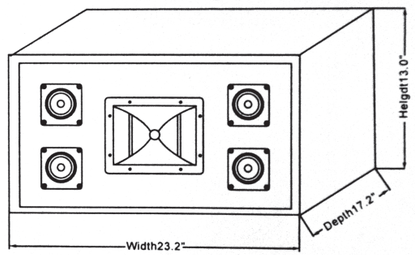

SPECIFICATIONS	PAHT8	PAHT9
ENCLOSURE TYPE	8-WAY	5-WAY
TWEETER SIZE	PIEZO 8"x 3.4"-inch (20.3x8.6-cm)	HORN 6"x 7"-inch (15.2x17.7-cm) PIEZO 4"x 3.5"-inch (10.1x8.8-cm)
SENSITIVITY	97DB	94DB
FREQUENCY RESPONSE	4K-27KHZ	1KHZ-27KHZ
MAX POWER	300 WATTS	300 WATTS
IMPEDANCE	8 OHM	8 OHM
DIMENSIONS	9.2"Hx16.8"Wx12"D-inch (23.3Hx42.6Wx30.4D-cm)	13"Hx23.2"Wx17.2"D-inch (33Hx58.9Wx43.6D-cm)

PyleUSA.com

For user guides in multiple languages,
SCAN THE QR CODE
and enter your model number
User Manuals available in
Italian I German I Polish I Turkish I Dutch

Preguntas o comentarios?
¡Estamos aquí para ayudar!
Phone: 1.718.535.1800
PyleUSA.com/ContactUs

Visite nuestro sitio web
ESCANÉAME
PyleUSA.com

PyleUSA.com

SPA

ESPECIFICACIONES

PADH121
PADH151
PADH181

PADH879 **PADH1079**
PADH1279 **PADH1579**

PADH124
PADH153
PADH183

PAHT8

PAHT6

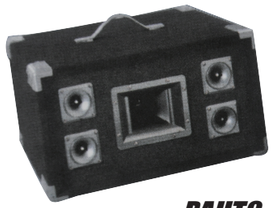

PAHT9

PAHT4

Acerca de los sistemas de altavoces Pyle PADH/PAHT ESCENARIO

Felicitaciones

Acaba de adquirir uno de nuestros altavoces Pyle PADH/PAHT de alta calidad. El sistema de altavoces Pyle PADH/PAHT ESCENARIO ha sido cuidadosamente diseñado y fabricado para su uso en el ESCENARIO. Pueden ofrecer un rendimiento alto y constante

Características generales de los sistemas de altavoces Pyle PADH/PAHT ESCENARIO

SERIE PADH:

CONSTRUCCIÓN RESISTENTE ESQUINAS REFORZADAS CON ALAMBRE

ACABADO ALFOMBRADO NEGRO

TERMINALES DE ALTAVOZ DE CONEXIÓN RÁPIDA

PUERTOS DOBLES PARA UNA MAYOR RESPUESTA DE GRAVES

RED DE CRUCE INTEGRADA

IMPEDANCIA: 8 OHMIOS

SERIE PAHT:

ACABADO ALFOMBRADO NEGRO

IMPEDANCIA: 8 OHMIOS

PADH879 PADH1079 PADH1279 PADH1579

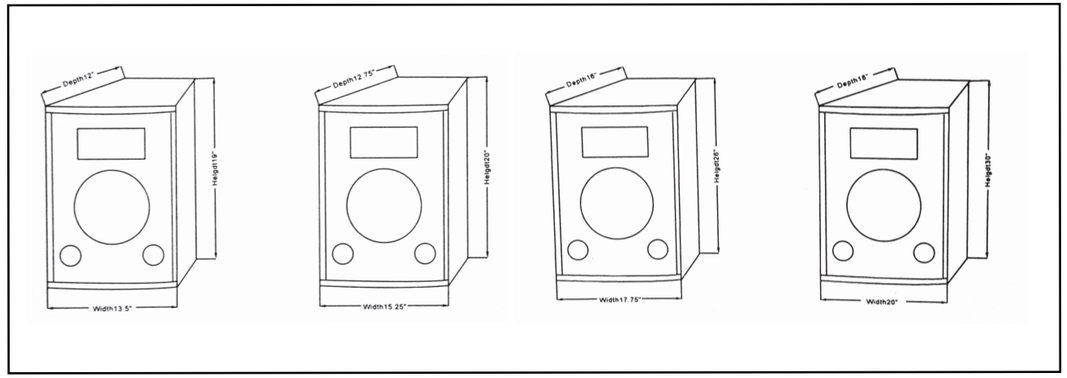

ESPECIFICACIONES	PADH879	PADH1079
TAMAÑO DEL ALTAVOZ	ALTAVOZ 1x8”-pulgadas (20.3-cm)	ALTAVOZ 1x10”-pulgadas (25.4-cm)
TAMAÑO BOCINA DE ALTA FRECUENCIA	DOMO DE BOCINA 3”x7”-pulgadas (7.6x17.7-cm)	DOMO DE BOCINA 4”x10”-pulgadas (10.1x25.4-cm)
SENSIBILIDAD	96DB	98DB
FRECUENCIA DE RESPUESTA	50-20KHZ	40-20KHZ
POTENCIA MÁXIMA	300 VATIOS	500 VATIOS
IMPEDANCIA	8 OHM	8 OHM
RED DE CRUCE	INCLUIDO	INCLUIDO
DIMENSIONES	19”Hx13.5”Wx12”D-pulgadas (48.2Hx34.2Wx30.4D-cm)	20”Hx15.25”Wx12.75”D-pulgadas (50.8Hx38.7Wx32.3D-cm)

ESPECIFICACIONES	PADH1279	PADH1579
TAMAÑO DEL ALTAVOZ	ALTAVOZ 1x12”-pulgadas (30.4-cm)	ALTAVOZ 1x15”-pulgadas (38.1-cm)
TAMAÑO BOCINA DE ALTA FRECUENCIA	DOMO DE BOCINA 4”x12”-pulgadas (10.1x30.8-cm)	DOMO DE BOCINA 5”x15”-pulgadas (12.7x38.1-cm)
SENSIBILIDAD	97DB	98DB
FRECUENCIA DE RESPUESTA	40-20KHZ	40-20KHZ
POTENCIA MÁXIMA	600 VATIOS	800 VATIOS
IMPEDANCIA	8 OHM	8 OHM
RED DE CRUCE	INCLUIDO	INCLUIDO
DIMENSIONES	26”Hx17.75”Wx16”D-pulgadas (66Hx45Wx40D-cm)	30”Hx20”Wx18”D-pulgadas (76.2Hx50.8Wx45.7D-cm)

PADH121 PADH151 PADH181

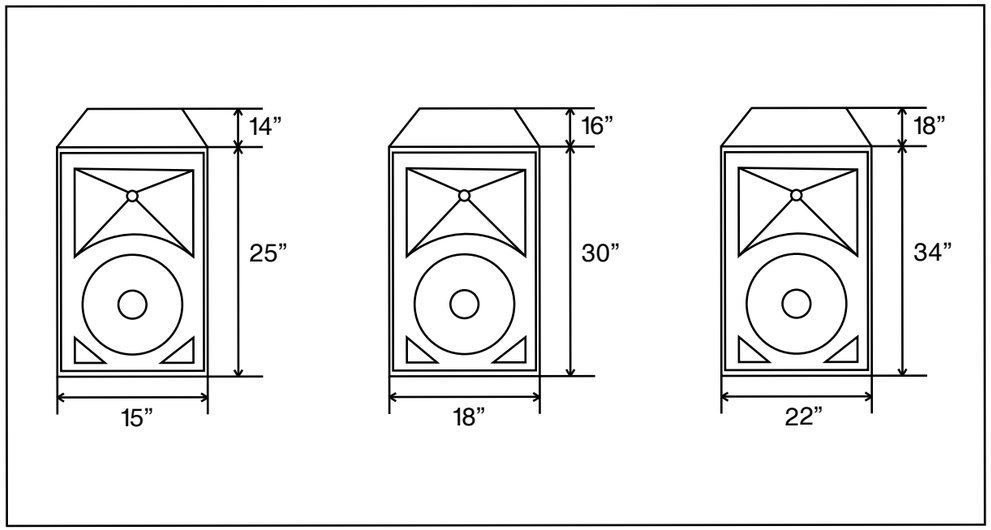

ESPECIFICACIONES	PADH121	PADH151	PADH181
TIPO DE CUBIERTA	REFLEJO DE GRAVES DE 2 VÍAS	REFLEJO DE GRAVES DE 2 VÍAS	REFLEJO DE GRAVES DE 2 VÍAS
TAMAÑO DEL ALTAVOZ	ALTAVOZ 1x12”-pulgadas (30.4-cm)	ALTAVOZ 1x15”-pulgadas (38.1-cm)	ALTAVOZ 1x18”-pulgadas (45.7-cm)
TAMAÑO BOCINA DE ALTA FRECUENCIA	DOMO 12”x14”-pulgadas (30.4x35.5-cm)	DOMO 15”x17”-pulgadas (38.1x43.1-cm)	DOMO 16”x20”-pulgadas (40.6x50.8-cm)
SENSIBILIDAD	97DB	97DB	97DB
FRECUENCIA DE RESPUESTA	50-20KHZ	45-20KHZ	40-20KHZ
POTENCIA MÁXIMA	600 VATIOS	800 VATIOS	1000 VATIOS
IMPEDANCIA	8 OHM	8 OHM	8 OHM
RED DE CRUCE	INCLUIDO	INCLUIDO	INCLUIDO
DIMENSIONES	25”Hx15”Wx14”D-pulgadas (63.5Hx38.1Wx35.5D-cm)	32”Hx18”Wx16”D-pulgadas (81.2Hx45.7Wx40.6D-cm)	34”Hx22”Wx18”D-pulgadas (86.3Hx55.8Wx45.7D-cm)

PADH124 PADH153 PADH183

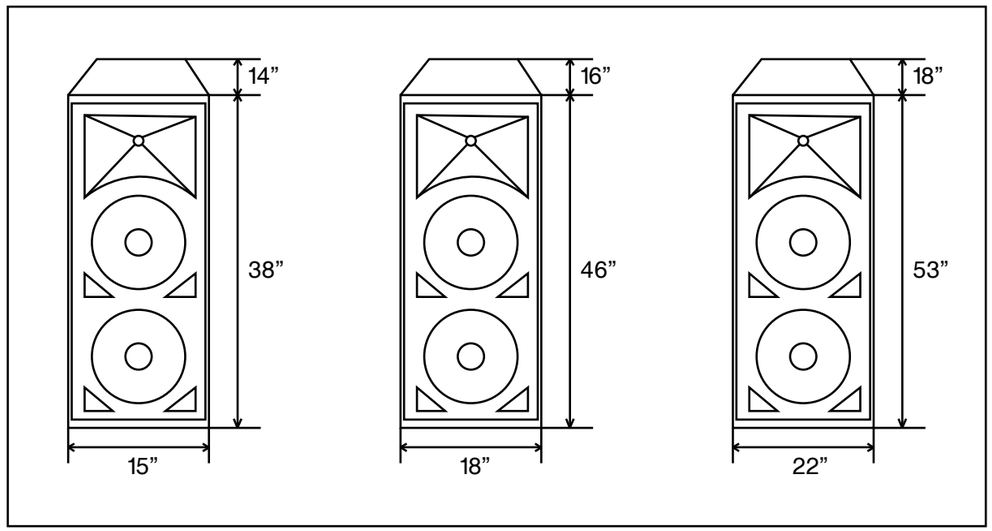

ESPECIFICACIONES	PADH124	PADH153	PADH183
TAMAÑO DEL ALTAVOZ	ALTAVOZ 2x12”-pulgadas (30.4-cm)	ALTAVOZ 2x15”-pulgadas (38.1-cm)	ALTAVOZ 2x18”-pulgadas (45.7-cm)
TAMAÑO BOCINA DE ALTA FRECUENCIA	DOMO: 12”x14”-pulgadas (30.4x35.5-cm)	DOMO: 15”x17”-pulgadas (38.1x43.1-cm)	DOMO: 16”x20”-pulgadas (40.6x50.8-cm)
SENSIBILIDAD	98DB	98DB	98DB
FRECUENCIA DE RESPUESTA	45-20KHZ	40-20KHZ	30-20KHZ
POTENCIA MÁXIMA	1200 VATIOS	1600 VATIOS	2000 VATIOS
IMPEDANCIA	8 OHM	8 OHM	8 OHM
RED DE CRUCE	INCLUIDO	INCLUIDO	INCLUIDO
DIMENSIONES	38”Hx15”Wx14”D-pulgadas (96.5Hx38.1Wx35.5D-cm)	46”Hx18”Wx16”D-pulgadas (116.8Hx45.7Wx40.6D-cm)	53”Hx22”Wx18”D-pulgadas (134.6Hx55.8Wx45.7D-cm)

PAHT6

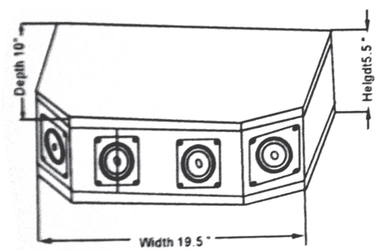

PAHT4

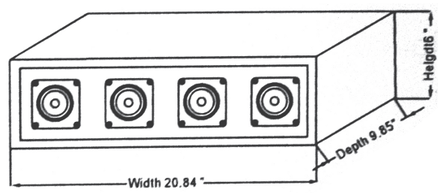

ESPECIFICACIONES	PAHT6	PAHT4
TAMAÑO BOCINA DE ALTA FRECUENCIA	PIEZO 6”x 3.5”-pulgadas (15.2x8.8-cm)	PIEZO 4”x 3”-pulgadas (10.1x7.6-cm)
SENSIBILIDAD	97DB	97DB
FRECUENCIA DE RESPUESTA	4K-27KHZ	4K-27KHZ
POTENCIA MÁXIMA	300 VATIOS	300 VATIOS
IMPEDANCIA	8 OHM	8 OHM
DIMENSIONES	5.5”Hx19.5”Wx10”D-pulgadas (13.9Hx49.5Wx25.4D-cm)	6”Hx20.84”Wx9.85”D-pulgadas (15.2Hx53Wx25D-cm)

PAHT8

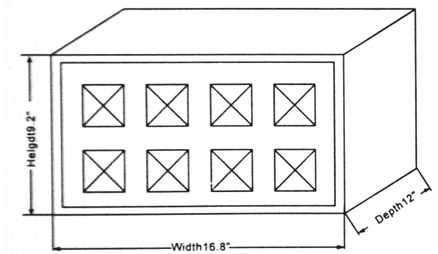

PAHT9

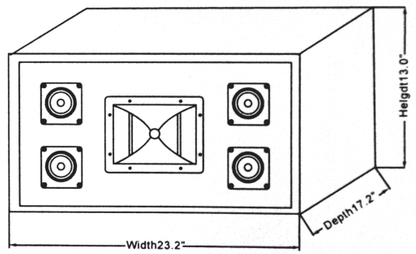

ESPECIFICACIONES	PAHT8	PAHT9
TIPO DE CUBIERTA	8-VÍAS	5-VÍAS
TAMAÑO BOCINA DE ALTA FRECUENCIA	PIEZO 8”x 3.4”-pulgadas (20.3x8.6-cm)	HORN 6”x 7”-pulgadas (15.2x17.7-cm) PIEZO 4”x 3.5”-pulgadas (10.1x8.8-cm)
SENSIBILIDAD	97DB	94DB
FRECUENCIA DE RESPUESTA	4K-27KHZ	1KHZ-27KHZ
POTENCIA MÁXIMA	300 VATIOS	300 VATIOS
IMPEDANCIA	8 OHM	8 OHM
DIMENSIONES	9.2”Hx16.8”Wx12”D-inch (23.3Hx42.6Wx30.4D-cm)	13”Hx23.2”Wx17.2”D-inch (33Hx58.9Wx43.6D-cm)

PYLE®

PyleUSA.com

For user guides in multiple languages,
SCAN THE QR CODE
and enter your model number
User Manuals available in
Italian I German I Polish I Turkish I Dutch

Questions ou commentaires?
Nous sommes ici pour aider!
Phone: 1.718.535.1800
PyleUSA.com/ContactUs

Visitez notre site Internet
SCANNE MOI
PyleUSA.com

PYLE®
PyleUSA.com

FRE

SPÉCIFICATIONS

PADH121
PADH151
PADH181

PADH879 **PADH1079**
PADH1279 **PADH1579**

PADH124
PADH153
PADH183

PAHT8

PAHT6

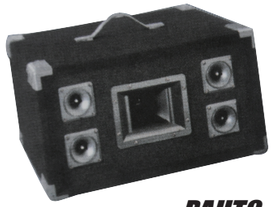

PAHT9

PAHT4

À propos des systèmes de haut-parleurs de scène Pyle PADH/PAHT

Félicitations!

Vous venez d'acquérir l'un de nos haut-parleurs de haute qualité de la série Pyle PADH/PAHT. Les systèmes de haut-parleurs de scène Pyle PADH/PAHT sont conçus et fabriqués avec soin pour une utilisation sur scène. Ils offrent des performances constantes et élevées.

Caractéristiques générales des systèmes de haut-parleurs de scène Pyle PADH/PAHT

Série PADH:

Construction robuste avec coins renforcés en fil métallique

Finition en tapis noir

Bornes de connexion rapide pour haut-parleurs

Ports doubles pour une meilleure réponse des basses

Réseau de croisement intégré

Impédance : 8 ohms

Série PAHT:

Finition en tapis noir

Impédance : 8 ohms

PADH879 PADH1079 PADH1279 PADH1579

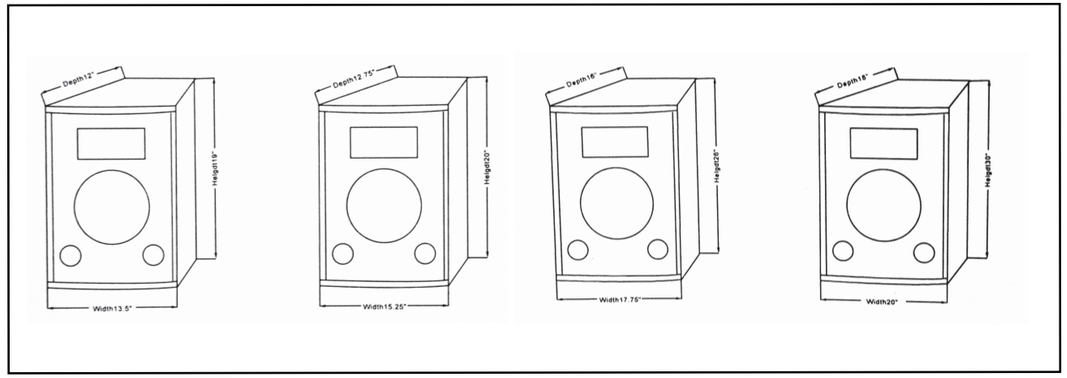

Spécifications	PADH879	PADH1079
Taille du woofer	WOOFER 1x8”-pouces (20.3-cm)	WOOFER 1x10”-pouces (25.4-cm)
Taille du tweeter	DOME HORN 3”x7”-pouces (7.6x17.7-cm)	DOME HORN 4”x10”-pouces (10.1x25.4-cm)
Sensibilité	96DB	98DB
Réponse en fréquence	50-20KHZ	40-20KHZ
Puissance maximale	300 WATTS	500 WATTS
Impédance	8 OHM	8 OHM
Réseau de croisement	Inclus	Inclus
Dimensions	19”Hx13.5”Wx12”D-pouces (48.2Hx34.2Wx30.4D-cm)	20”Hx15.25”Wx12.75”D-pouces (50.8Hx38.7Wx32.3D-cm)

Spécifications	PADH1279	PADH1579
Taille du woofer	WOOFER 1x12”-pouces (30.4-cm)	WOOFER 1x15”-pouces (38.1-cm)
Taille du tweeter	DOME HORN 4”x12”-pouces (10.1x30.8-cm)	DOME HORN 5”x15”-pouces (12.7x38.1-cm)
Sensibilité	97DB	98DB
Réponse en fréquence	40-20KHZ	40-20KHZ
Puissance maximale	600 WATTS	800 WATTS
Impédance	8 OHM	8 OHM
Réseau de croisement	Inclus	Inclus
Dimensions	26”Hx17.75”Wx16”D-pouces (66Hx45Wx40D-cm)	30”Hx20”Wx18”D-pouces (76.2Hx50.8Wx45.7D-cm)

PADH121 PADH151 PADH181

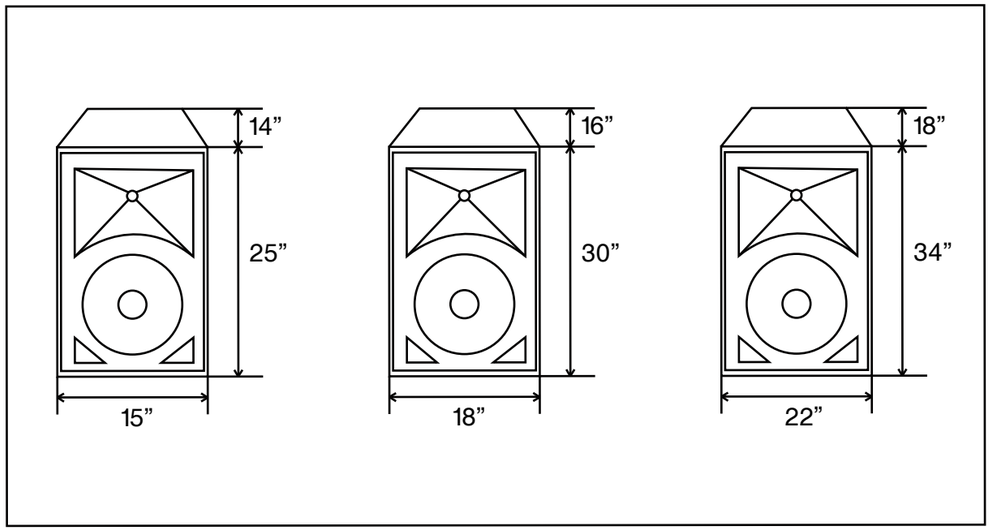

Spécifications	PADH121	PADH151	PADH181
Type d’enceinte	Réflexe basses à 2 voies	Réflexe basses à 2 voies	Réflexe basses à 2 voies
Taille du woofer	WOOFER 1x12”-pouces (30.4-cm)	WOOFER 1x15”-pouces (38.1-cm)	WOOFER 1x18”-pouces (45.7-cm)
Taille du tweeter	DOME 12”x14”-pouces (30.4x35.5-cm)	DOME 15”x17”-pouces (38.1x43.1-cm)	DOME 16”x20”-pouces (40.6x50.8-cm)
Sensibilité	97DB	97DB	97DB
Réponse en fréquence	50-20KHZ	45-20KHZ	40-20KHZ
Puissance maximale	600 WATTS	800 WATTS	1000 WATTS
Impédance	8 OHM	8 OHM	8 OHM
Réseau de croisement	Inclus	Inclus	Inclus
Dimensions	25”Hx15”Wx14”D-pouces (63.5Hx38.1Wx35.5D-cm)	32”Hx18”Wx16”D-pouces (81.2Hx45.7Wx40.6D-cm)	34”Hx22”Wx18”D-pouces (86.3Hx55.8Wx45.7D-cm)

PADH124 PADH153 PADH183

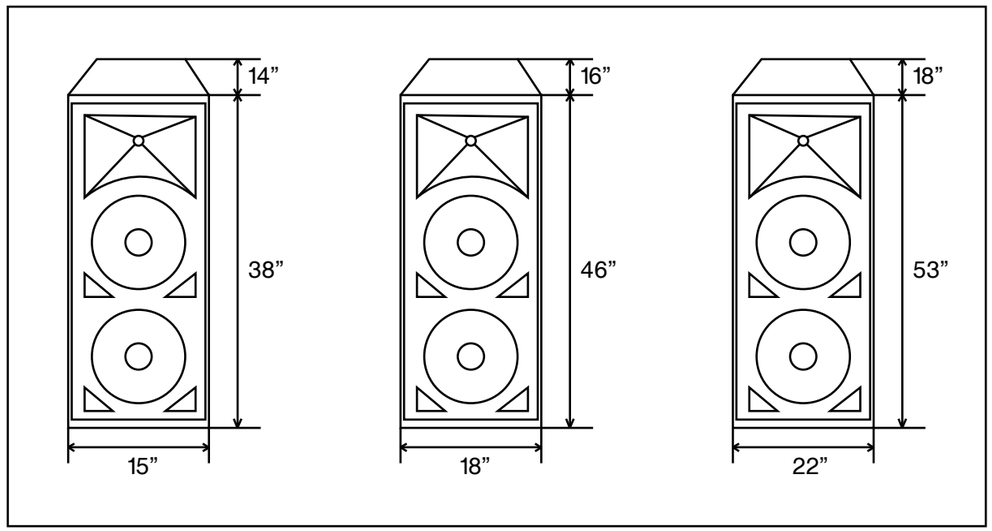

Spécifications	PADH124	PADH153	PADH183
Taille du woofer	WOOFER 2x12”-pouces (30.4-cm)	WOOFER 2x15”-pouces (38.1-cm)	WOOFER 2x18”-pouces (45.7-cm)
Taille du tweeter	DOME: 12”x14”-pouces (30.4x35.5-cm)	DOME: 15”x17”-pouces (38.1x43.1-cm)	DOME: 16”x20”-pouces (40.6x50.8-cm)
Sensibilité	98DB	98DB	98DB
Réponse en fréquence	45-20KHZ	40-20KHZ	30-20KHZ
Puissance maximale	1200 WATTS	1600 WATTS	2000 WATTS
Impédance	8 OHM	8 OHM	8 OHM
Réseau de croisement	Inclus	Inclus	Inclus
Dimensions	38”Hx15”Wx14”D-pouces (96.5Hx38.1Wx35.5D-cm)	46”Hx18”Wx16”D-pouces (116.8Hx45.7Wx40.6D-cm)	53”Hx22”Wx18”D-pouces (134.6Hx55.8Wx45.7D-cm)

PAHT6

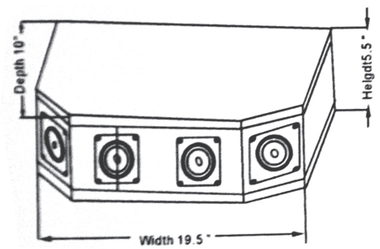

PAHT4

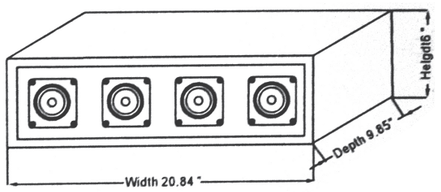

Spécifications	PAHT6	PAHT4
Taille du tweeter	PIEZO 6"x 3.5"-pouces (15.2x8.8-cm)	PIEZO 4"x 3"-pouces (10.1x7.6-cm)
Sensibilité	97DB	97DB
Réponse en fréquence	4K-27KHZ	4K-27KHZ
Puissance maximale	300 WATTS	300 WATTS
Impédance	8 OHM	8 OHM
Dimensions	5.5"Hx19.5"Wx10"D-pouces (13.9Hx49.5Wx25.4D-cm)	6"Hx20.84"Wx9.85"D-pouces (15.2Hx53Wx25D-cm)

PAHT8

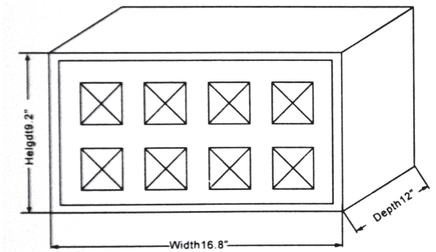

PAHT9

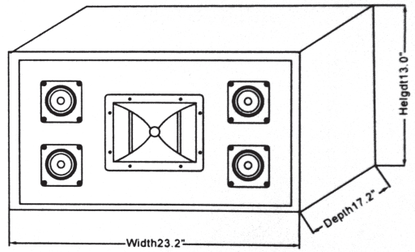

Spécifications	PAHT8	PAHT9
Type d'enceinte	8-voies	5-voies
Taille du tweeter	PIEZO 8"x 3.4"-pouces (20.3x8.6-cm)	HORN 6"x 7"-pouces (15.2x17.7-cm) PIEZO 4"x 3.5"-pouces (10.1x8.8-cm)
Sensibilité	97DB	94DB
Réponse en fréquence	4K-27KHZ	1KHZ-27KHZ
Puissance maximale	300 WATTS	300 WATTS
Impédance	8 OHM	8 OHM
Dimensions	9.2"Hx16.8"Wx12"D-pouces (23.3Hx42.6Wx30.4D-cm)	13"Hx23.2"Wx17.2"D-pouces (33Hx58.9Wx43.6D-cm)